NOTES:

1. STANDARD GRATE AS SHOWN IN TH PLAN VIEW SHALL BE PROVIDED UNLESS THE PLANS SPECIFICALLY REQUIRE GRATE "V". PLACE GRATE SO THE DIAGONAL BARS DIRECT DRAINAGE TOWARD THE CURB. ALL BAR EDGES TO BE ROUNDED 1/8"RADIUS.

2. CASTINGS: THE DESIGN SHALL BE ESSENTIALLY THE SAME AND EQUALLY AS STRONG AS THOSE SHOWN HEREON. MINIMUM WEIGHTS ARE: CURB CASTINGS 305 LBS., TWO GRATES 254 LBS., FRAME 590 LBS., AND TWO "V"GRATES 210 LBS.
BEARING AREAS OF FRAME AND GRATE SHALL BE SO FITTED AND FINISHED, WITHOUT PROJECTIONS, AS TO PROVIDE A FIRM AND EVEN SEAT FOR ALL PORTIONS OF THE GRATE IN THE FRAME WITHOUT ROCKING.

3. DOWELS: FOUR 1"x18" DOWELS ARE REQUIRED FOR CONCRETE PAVEMENT OR GUTTER BLOCKOUT.

4. BRICK OR CONCRETE BLOCK SIDE WALLS, WHEN USED IN PLACE OF CONCRETE, SHALL BE 8"NOMINAL THICKNESS.

5. BLOCKOUT SHALL BE PAVED WITH CLASS C CONCRETE IN PCC PAVEMENT OR GUTTER AND PAID FOR AS PART OF THE PAVEMENT QUANTITIES BECAUSE OF THE CASTING. NO DEDUCTION TO BE MADE IN CURB QUANTITIES.

6. PRECAST CONSTRUCTION IS PERMITTED, CONCRETE SHALL MEET REQUIREMENTS OF 706.13 WITH 6±2% AIR VOID CONTENT IN THE HARDENED CONCRETE. PRECAST WALLS SHALL BE SUFFICIENT TO PERMIT SHIPPING AND PLACEMENT WITHOUT DAMAGE.

INLET INSTALLATION IN
28"CONCRETE CURB & GUTTER

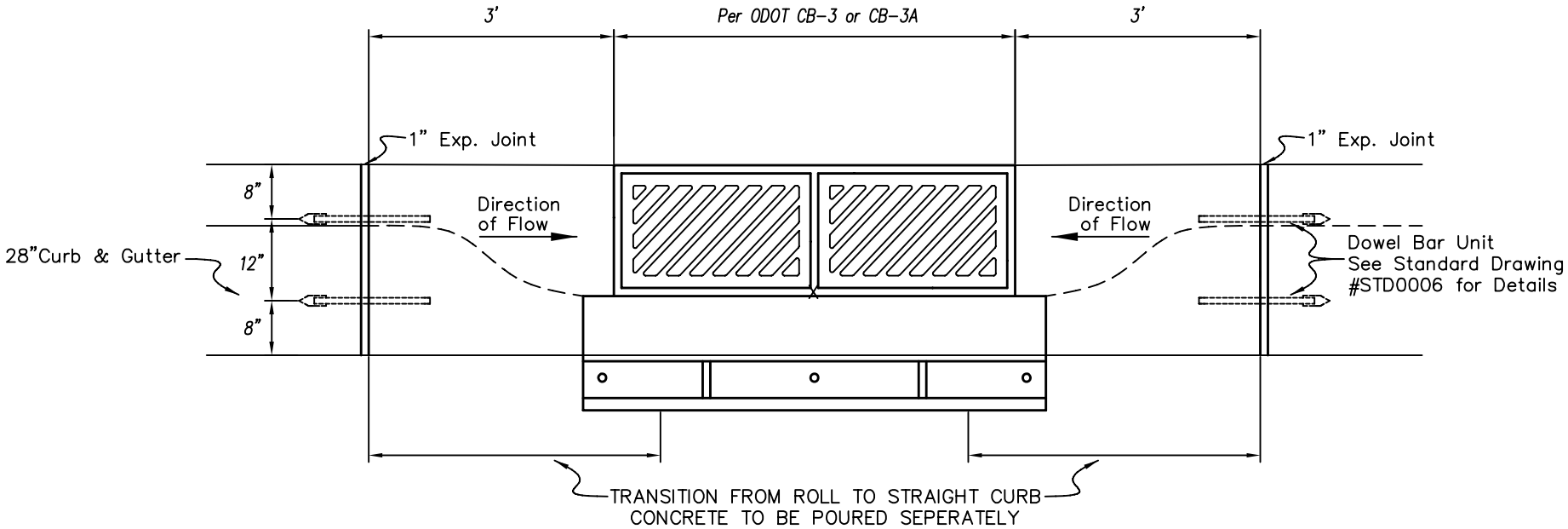

CATCH BASIN NO. 3 AND 3A MODIFIED (1 OF 2)

STD0014